ART. 60-116

HAND TOWEL ROLL DISPENSER

ALPHA SERIES

AIR-WOLF GmbH
Waschraum- und Hygienetechnik
Unterhachinger Strasse 75
D-81737 München

Telefon +49 (89) 420790 -10
Telefax +49 (89) 420790 -70
air-wolf@air-wolf.de
www.air-wolf.de

Ein Unternehmen der
Wolf-Gruppe

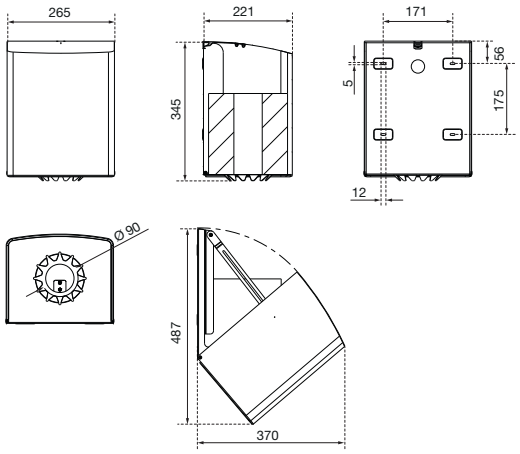

TENDER TEXT

Hand towel roll dispenser, freely reloadable with center pull paper towels, white coated stainless steel, RAL 9003, refilled by folding down the cover, with tear-off edges, rounded top to prevent objects being put down, with standard lock, four-point mounting, including mounting materials and key, for wall mounting

DIMENSIONS

H x W x D	345 x 265 x 221 mm
Roll height	max. 250 mm
Roll diameter	max. 230 mm
Weight	4.6 kg

AREAS OF APPLICATION

Roll towel dispensers are primarily used in areas where paper needs to be stored hygienically and securely and is mainly used for cleaning: in food processing, in trade, or in tanning salons. Of course, roll towels can also be used for drying hands, but we advise against this due to the comparatively high paper consumption and recommend folded paper towels or warm air hand dryers instead.

MOUNTING TIP

People are often in a hurry and avoid detours. Install the hand towel roll dispenser above the waste bin and if possible on the direct route between wash basin and exit.

ALTERNATIVE SURFACE DESIGNS

AIR-WOLF Hand towel roll dispenser
Black coated stainless steel, Art. 60-117

AIR-WOLF Hand towel roll dispenser
Brushed stainless steel, Art. 60-118

AIR-WOLF Hand towel roll dispenser
Matt white coated stainless steel, Art. 60-335

AIR-WOLF Hand towel roll dispenser
Blue-green coated stainless steel, Art. 60-336

AIR-WOLF Hand towel roll dispenser
Brass-colored coated stainless steel, Art. 60-337

Art. 60-117

Art. 60-118

Art. 60-335

Art. 60-336

Art. 60-337

© AIR-WOLF GmbH, Rev.: 3.0/ 09/25/ PAB, alle Maßangaben in Millimeter, Irrtum, Maßtoleranzen und technische Änderungen vorbehalten.