ART. 60-431

HOOK RACK WITH 1 HOOK

ALPHA SERIES

AIR-WOLF GmbH
Waschraum- und Hygienetechnik
Unterhachinger Strasse 75
D-81737 München

Telefon +49 (89) 420790 -10
Telefax +49 (89) 420790 -70
air-wolf@air-wolf.de
www.air-wolf.de

Ein Unternehmen der
Wolf-Gruppe

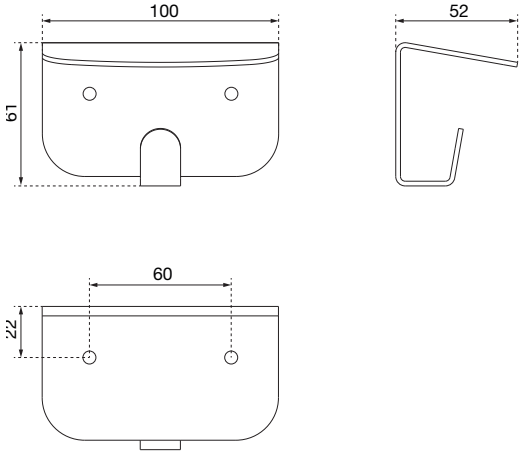

TENDER TEXT

Hook rack with 1 hook, blue-green coated stainless steel, RAL 5021, two-point-mounting, mounting materials and key included, for surface installation

DIMENSIONS

H x W x D	61 x 100 x 52 mm
Weight	0,20 kg

AREAS OF APPLICATION

Designed for universal use, including in public areas that are heavily frequented and at risk of vandalism: airports, stadiums, eventhalls, restaurant and food service industry, universities, nightclubs, communal buildings, shops, chambers, offices, theatres, cinemas, hotels, spas, etc.

MOUNTING TIP

Because of their size and shape, hook racks can be a potential safety hazard. They should be mounted in such a way that visitors will not get injured.

LEGAL TEXT

„Toilet cubicles must be equipped with toilet paper, paper holders, and coat hooks.“ *(Source: Workplace guidelines for the Workplace Ordinance, § 35)*

ALTERNATIVE SURFACE DESIGNS

AIR-WOLF hook rack with 1 hook
Black coated stainless steel, Art. 60-160

AIR-WOLF hook rack with 1 hook
Brushed stainless steel, Art. 60-161

AIR-WOLF hook rack with 1 hook
White coated stainless steel, Art. 60-162

AIR-WOLF hook rack with 1 hook
Matt white coated stainless steel, Art. 60-430

AIR-WOLF hook rack with 1 hook
Brass-colored coated stainless steel, Art. 60-432

Art. 60-160

Art. 60-161

Art. 60-162

Art. 60-430

Art. 60-432

© AIR-WOLF GmbH, Rev.: 1.0/10/25/ PAB, alle Maßangaben in Millimeter, Irrtum, Maßtoleranzen und technische Änderungen vorbehalten.